Installation Manual for LONGi Solar Modules

1000V Photovoltaic Modules

Safety Notes

- *This manual elaborates on installation and safety use information for Solar power generating modules (hereinafter referred to as module) of LONGi Green Energy Technology Co., Ltd.. (hereinafter referred to as LONGi Solar). Please abide by all safety precautions in this guide and local regulations.*
- *Installation of modules requires professional skills and knowledge and is to be carried out by qualified personnel. Please read this manual carefully before installing and using this module. Installation personnel shall get familiar with mechanical and electrical requirements of this system. Please keep this manual properly as reference for future maintenance or upkeep, or for sales and treatment of modules.*
- *If you have any questions, please contact LONGi global quality and customer service department for further interpretation.*

LONGi Solar Technology Co., Ltd.
TEL:+86-400-9696199
Fax: +86-29-86686228

Contents

1 Introduction 3

2 Laws and regulations 3

3 General Information 4

3.1 Module Identification 4
3.2 Regular Safety 5
3.3 Electric Performance Safety 6
3.4 Operation Safety 6
3.5 Fire Safety 7

4 Installation conditions 8

4.1 Installation site and working environments 8
4.2 Selection of Tilt Angles 9

5 Mechanical Installation 9

5.1 Regular Requirements 9
5.2 Installation Methods 10

6 Electric installation 15

6.1 Electric performance 15
6.2 Cables and Connecting Wires 16
6.3 Connector 17
6.4 Bypass Diode 17

7 Grounding 18

7.1 Grounding by grounding clamp 18
7.2 Grounding by Unoccupied Mounting Holes 19
7.3 Other Third Party Grounding Devices 20

8 Operation and Maintenance 20

8.1 Cleaning 20
8.2 Inspection of Module Appearance 21
8.3 Inspection of Connectors and Cables 21

LONGi Solar Technology Co., Ltd.
TEL:+86-400-9696199
Fax: +86-29-86686228

1 Introduction

Thank You for Choosing LONGi Solar PV Modules!

This installation manual includes important electric and mechanical installation instructions. Please understand these instructions before installing LONGi modules. In addition, this manual also contains some safety instructions that you have to know. All contents in this manual are intellectual properties of LONGi Solar which originates from the long-term technical exploration and accumulated experience.

This installation manual does not entail any explicit or implicit quality warranty and does not stipulate on compensation schemes for losses, module damages or other costs caused by or related to module installation, operation, utilization and maintenance process. If patent rights or the third party rights are infringed by use of modules, LONGi Solar shall not take any responsibility. LONGi Solar reserves the rights for modifying the product manual or installation manual without notice in advance.

If customers fail to install modules as per the requirements set forth in this manual, the quality warranty provided for customers during sales shall become invalid. In addition, suggestions in this manual are to improve safety of module installation, which are proved by tests and practices. Please provide this manual to owners of the solar PV power systems for reference and instruct them in the requirements and suggestions relevant to safety, operation and maintenance.

2 Laws and regulations

Mechanical and electrical installation of Solar PV Modules shall be carried out as per the relevant laws and regulations such as electric law, building law and electric connecting requirements. These laws and regulations vary in accordance with different installation sites, such as building roof installation, vehicle-mounted application. The relevant requirements may also vary in accordance with installation system voltage, DC or AC electricity. Please contact

LONGi Solar Technology Co., Ltd.
TEL:+86-400-9696199
Fax: +86-29-86686228

the local authorities for specific clauses.

3 General Information

3.1 Module Identification

Each module is pasted with 3 labels providing information as follows:

1. Nameplate: It describes product type, standard rated power, rated current, rated voltage, open circuit voltage, short circuit current under testing conditions, certification indicator, maximum system voltage, etc.

2. Current Level Label: Divide modules as per the maximum current into 3 levels: H, M or L (H is the highest current level). The most recommended practice is to install modules with the same current level (such as H) in a string during the installation.

3. Serial Number: Each module has a unique serial number which is solidified inside the module permanently and it can be seen at the front top of the module. This serial number is put in before lamination of the module. In addition, you can find the same serial number on the module nameplate.

LONGi Solar Technology Co., Ltd.
TEL:+86-400-9696199
Fax: +86-29-86686228

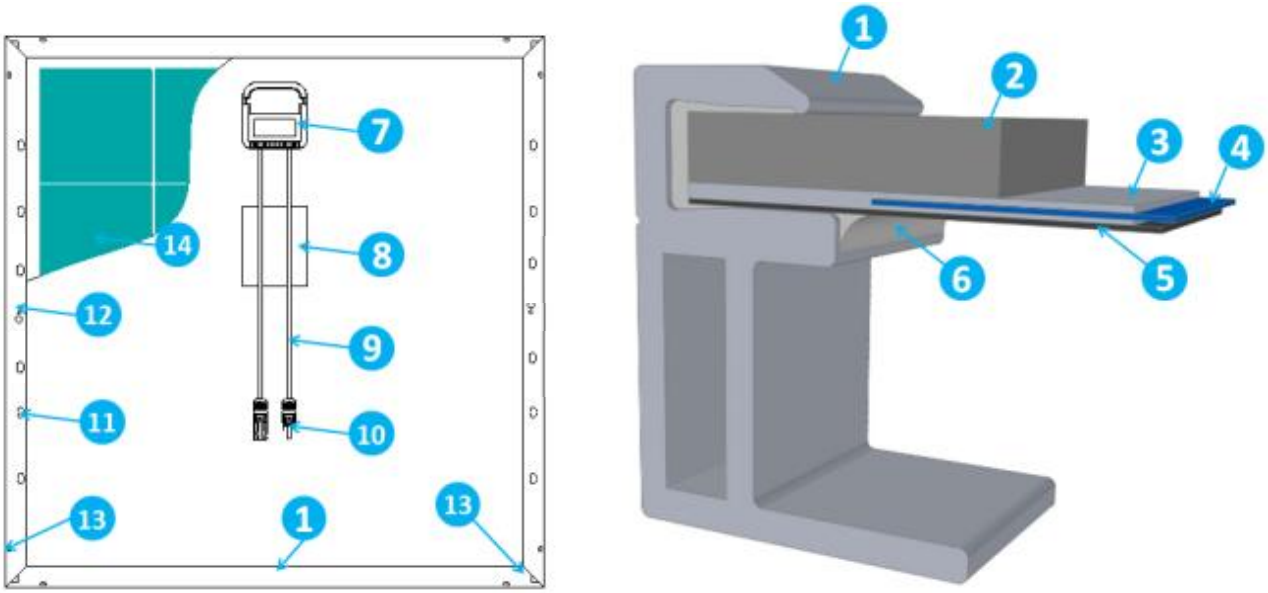

1. Aluminum Frame	2. PV Tempered Glass	3. EVA	4. Solar Cell
5. Back Sheet	6. Silica Gel	7. Junction Box	8. Nameplate
9. Cables	10. Connector	11. Mounting Hole	12. Grounding Hole
13. Drainage Hole	14. Solar Cell		

Figure 1. Module Section Structure and Components

3.2 Regular Safety

The design of LONGi Solar modules conforms to the IEC 61215 and IEC 61730 standards and its application level is rated as Class A. The modules can be used for the solar PV power systems above DC 50V or 240W which the people may access to. And the modules pass IEC61730-1 and IEC61730-2, meeting requirements of Safety Class II.

When the modules are mounted on rooftop, it is necessary to take into account the overall fire-proof rating of the final structure as well as overall maintenance. The roof-mounted solar PV power systems shall be installed after assessment by building experts or civil engineers and with the formal analysis of the entire structure. The roof structure shall be proved to be able to undertake the additional mounting systems, including solar module weight.

For your safety, please do not work on the roof without safety measures, including but not limited to fall protection, ladder or stair and personal safety devices.

For your safety, please do not install or handle modules in unfavorable conditions, including

LONGi Solar Technology Co., Ltd.
TEL:+86-400-9696199
Fax: +86-29-86686228

but not limited to strong wind or gust, damp or sandy rooftops.

3.3 Electric Performance Safety

Solar modules produce DC electricity in the sunlight, so there will cause hazards such as electric shock or burning when the module cables or metals are touched by human or animals. 30V DC voltage or higher voltage can be fatal to human or animals.

In case that no load or external circuit is connected, the modules will also produce voltage. Please use insulation tools and wear rubber gloves when you handle the modules in the sunlight.

Solar PV Modules do not have switch. Solar PV Modules can only stop work when they are kept from sunlight or covered by cloth, carton board or light-proof materials or when front sides of modules are placed on smooth and flat surface.

To avoid electric arc or electric shock, please do not break down electric connection in loaded conditions. Wrong connections will also lead to electric arc or shock. Keep connectors dry and clean and make sure that they are in good condition. Do not insert other metal objects into the connectors or carry out electric connection by any other means.

Snow and water in surrounding environments will intensify light reflection and lead to increase of current and output power. And the module voltage and power will increase at a low temperature.

If module glass or encapsulating materials are damaged, please wear personal safety devices and isolate modules from the circuit.

Work shall be only carried out in dry conditions with dry tools. Do not operate the modules when modules are wet unless you wear the proper protection devices against electric shock. Please clean modules as per the relevant instructions in this manual.

3.4 Operation Safety

Do not open LONGi module's package during transportation and storage, unless the modules arrive at the installation site.

Protect the package well and avoid any damage to the package. Do not make packaged modules on pallet fall directly.

LONGi Solar Technology Co., Ltd.
TEL:+86-400-9696199
Fax: +86-29-86686228

Do not exceed the tier limitation indicated on the packaging cartons when stacking up modules.

Put packaging cartons in the ventilated, rain-proof and dry places before unpacking modules.

Open LONGi's packaging carton as per unpacking instructions provided by LONGi Solar.

Do not hold the junction box or cables to lift the entire module in any case.

Standing or walking on modules is strictly prohibited.

Do not drop one module onto another module.

To avoid any damage to the front glass of a module, do not put heavy objects on it.

Handle carefully when placing modules on a surface and especially at corners.

Do not try to dismantle any module or remove nameplate or parts of modules.

Do not brush paints or apply any adhesive on the surface of modules.

Do not damage, carve or scratch back film of modules.

Do not drill on the frames of modules, which may reduce the frames' loading capacity or lead to corrosion of the frames.

Do not scratch anodized coating of aluminum frame except for grounding connection. Scratch may lead to corrosion of the frame and reduce its loading capacity.

Do not on your own repair glass or modules which the back film is damaged.

3.5 Fire Safety

Please consult local laws and regulations before installing modules and abide by requirements about the fire safety of buildings. The fire-proof rating of LONGi Solar modules is Class C in accordance with IEC61730-2 standard.

The rooftop shall be coated with a layer of fireproof materials conforming to such rating for before the roof-mounted installation is carried out. Make sure that the back sheet and the mounting surface are fully ventilated.

The difference between rooftop structures and installation methods will affect fireproof performance of buildings. Improper installation may cause fire hazards.

To guarantee the fire-proof rating, the module frame shall be at least 10cm from the rooftop.

Please choose proper module accessories such as fuses, circuit breakers and grounding

LONGi Solar Technology Co., Ltd.
TEL:+86-400-9696199
Fax: +86-29-86686228

connectors as per local laws or regulations.

Please do not use modules if there are exposed inflammable gases nearby.

4 Installation conditions

4.1 Installation site and working environments

The modules can only be used on earth but not in outer space.

Do not focalize the sunlight with mirrors or magnifying glass onto modules.

LONGi Solar modules shall be installed on proper buildings or other appropriate places (such as ground, garage, building outer wall, rooftop, solar tracking system) but shall not be installed on any mobile vehicle.

Do not install modules at the places that may be submerged by water.

LONGi Solar recommends that modules are installed in the environment with the ambient temperature of -20℃ to 46℃ which is the monthly average highest and lowest temperature of the installation sites. The extreme ambient temperature for modules ranges from -40℃ to 85℃.

Make sure that the installed modules do not bear wind or snow load that exceeds the permissible maximum load.

Modules shall be installed in a place free from shades throughout the year. Make sure there are no obstacles blocking sunlight at the installation site.

Lightning and thunder protection shall be provided for modules installed in places with frequent lightning and thunders.

Do not install modules in places where inflammable gases are possibly emitted.

Modules shall not be used in the environment with frequent hail, snow, blowing sand, smoke dust, polluted air and soot or in places with strong corrosive substances such as salt, salty mist, saline, active chemical steam, acid rain, or other substances corroding modules, affecting module safety or performance.

Please take protective measures to make reliable and safe installation of modules in harsh environments such as heavy snow, freezing cold and strong wind or places close to waters and islands with salty mist or deserts, etc.

LONGi Solar Technology Co., Ltd.
TEL:+86-400-9696199
Fax: +86-29-86686228

LONGi Solar modules have passed IEC61701 salty mist corrosion test, but the corrosion may occur at the joints connecting the module frame and the mounting system or grounding joints. LONGi modules can be installed less than 500mm but more than 50m from the seaside but stainless steel or aluminum shall be applied to contact solar PV Modules. And anti-corrosion protection shall be furnished for installation joints. See the installation requirements in Seaside Installation Instructions by LONGi Solar.

4.2 Selection of Tilt Angles

Tilt angle of module: the included angle between module surface and horizontal surface. The module will obtain the optimal power output when its front surface is in direct sunlight.

Modules shall be mounted towards the south in the north hemisphere and towards north in the south hemisphere.

A specific installation angle shall be determined as per the installation guide for standard solar PV modules or advices from solar PV module installers.

LONGI suggests that the tilt angle for the module installation shall not be less than 10° so that the dust on the module surface can be flushed away easily by rainfall and times of cleaning module can be reduced accordingly. And it also facilitates the drainage of collected water on the module surface and avoids water print on the glass due to long time water collection which may further affect module appearance and performance.

5 Mechanical Installation

5.1 Regular Requirements

Make sure that module installation methods and mounting system are solid enough to bear the estimated load, which is the assurance that the mounting system installer must provide. The mounting system shall be inspected and tested by a third party testing institution with static mechanics analysis capacity in accordance with local national or international standards such as DIN1055 or its equivalent.

The mounting system shall be made from durable, corrosion-resistant, ultraviolet-proof

LONGi Solar Technology Co., Ltd.
TEL:+86-400-9696199
Fax: +86-29-86686228

materials.

Modules shall be fixed on the mounting system firmly.

Use the elevated mounting systems in places with heavy snow so the lowest point of modules shall not be covered by snow for a long time. In addition, make the lowest point high enough so as to avoid shading of plants and plants or damage by blowing sands and stones.

If modules are installed on mounting systems parallel to the rooftop or wall, the minimum spacing between the module frame and the rooftop or wall shall be 10cm for ventilation so as to prevent the damage of the module's cables.

Drilling holes on the glass or frame of modules is strictly prohibited.

Make sure that the building is suitable for installation before modules are mounted on rooftop. Moreover, seal the permeable positions of rooftop properly to prevent leakage of rainwater.

The module frame has thermal expansion and cold contraction so the frame interval between two adjoining modules shall be no less than 10mm.

Make sure that the back sheet of the module will not contact the mounting system behind the module or any building structure, especially when the module surface bears pressure.

The maximum static load of modules is: 2400Pa (equal to wind load) for backside and 5400Pa or 2400Pa (equal to snow load or wind load) for front side. This depends on the installation type (please refer to the installation method below).

Module installation methods cannot cause electrochemical corrosion between module aluminum frame and other metals. The electric potential difference of contacting metals shall not exceed 0.6V as is recommended in the Appendix of UL1703 *Flat Plate Photovoltaic Modules and Panels*.

Modules can be installed horizontally or vertically.

5.2 Installation Methods

Module and mounting system can be fixed by mounting holes, clamps or embedded systems. The installation shall be carried out as the following illustrations and suggestions. If the installation methods is different, please consult LONGi Solar and obtain approval of LONGi Solar. Otherwise, the modules may be damaged and the quality warranty is deemed null and void.

LONGi Solar Technology Co., Ltd.
TEL:+86-400-9696199
Fax: +86-29-86686228

5.2.1 Install Modules through Mounting Holes

Make use of bolts to fix modules on the mounting system through mounting holes on the back of the frame. See details in Figure 2.

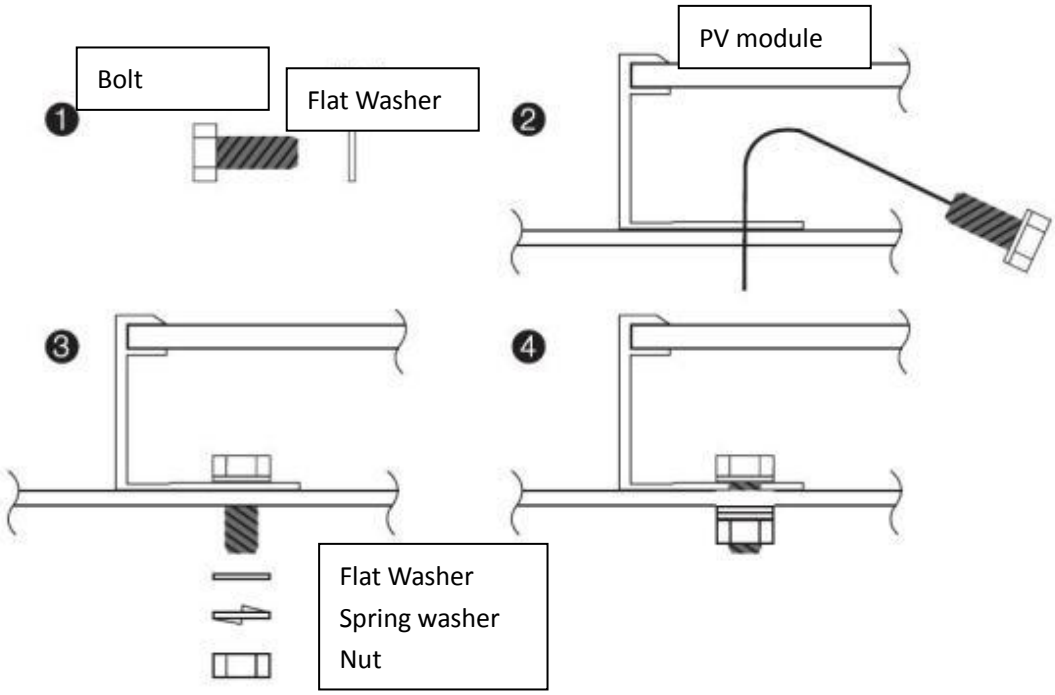

Figure 2 Installation Method

Accessories recommended as follows:

1. Bolt
   Material: stainless steel
   Dimension and length: M6*16mm, M8*16mm
2. Washer
   Material: stainless steel
   Dimension: M6,M8
3. Spring washer
   Material: stainless steel
   Dimension: M6,M8
   Torque for fastening bolts: 14N•m to 20N•m
4. Nut
   Material: stainless steel
   Dimension: M6,M8

5.2.2 Install Modules with Clamps

Use the special clamp to install modules. See Figure 3.

A. Fix modules on the mounting system with metal clamps. The following clamps or those clamps recognized by the solar PV system installer are recommended.

Width: no less than 38mm；
Thickness: no less than 3mm；
Material: aluminum；
Bolt: M8.

B. Torque for fastening bolt: 18N•m to 24N•m

C. The clamp shall not contact glass or make module frame deformed in any case. The contacting

LONGi Solar Technology Co., Ltd.
TEL:+86-400-9696199
Fax: +86-29-86686228

surface of the clamp contacting the front side the frame shall be even and smooth. Otherwise, the frame and module may be damaged. Make sure that the clamp will not produce any shading effect. Drain holes shall not be blocked by the clamp.

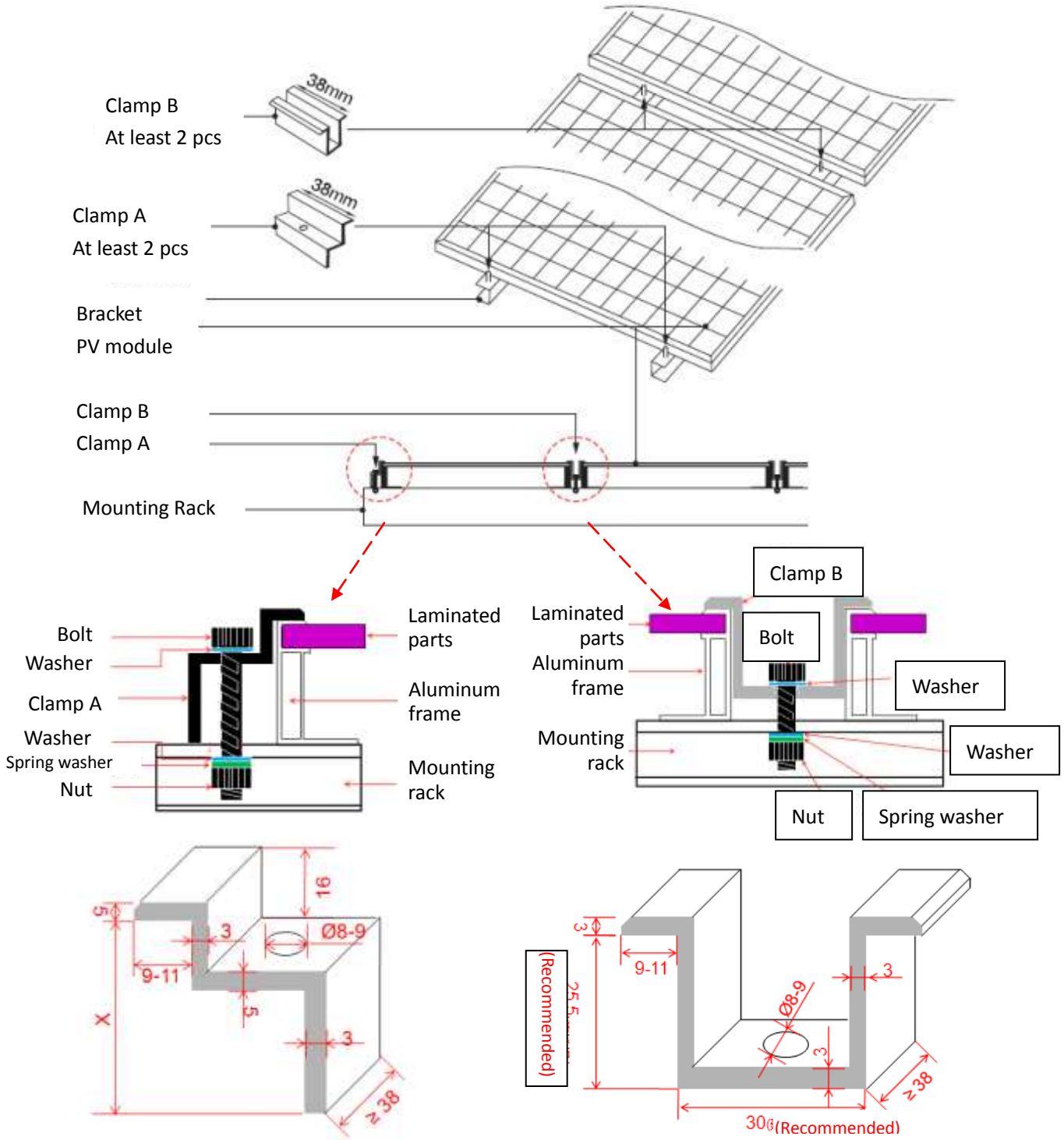

Clamp A for the Ends of a String (X=module frame thickness) Clamp B for Middle Modules of a String

Figure 3 Clamp Illustration (unit: mm)

LONGi Solar Technology Co., Ltd.
TEL:+86-400-9696199
Fax: +86-29-86686228

5.2.3 Positions of Fixing Points

- ✧ Low/normal loading conditions apply to most environments: the maximum static pressure on the backside of the module is 2400pa (equal to wind load) and the maximum static pressure on the front side is 2400pa (equal to wind load and snow load).
- ✧ High loading conditions apply to severe environments (such as wind storm, heavy snow): the maximum static pressure on the backside of the module is 2400pa (equal to wind load) and the maximum static pressure on the front side is 5400pa (equal to wind load and snow load), which is the highest requirement on pressure in the IEC standards.
- ✧ For dynamic loads such as gust, it needs to triple the safety coefficient. That is that the maximum gust pressure is ±800Pa and the wind speed is less than 130 Km/hour.

LONGi Solar Technology Co., Ltd.
TEL:+86-400-9696199
Fax: +86-29-86686228

	Low/normal loading conditions apply to most environments:	High loading conditions apply to severe environments (such as wind storm, heavy snow):
Mounting by bolts through mounting holes	Mounting hole 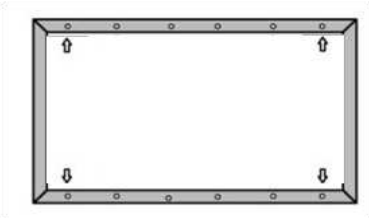 Use 4 Mounting holes	Mounting hole 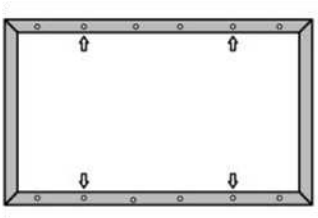 Use 4 Mounting holes
Clamping on long side	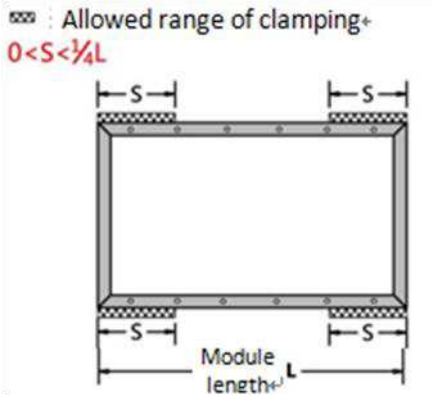	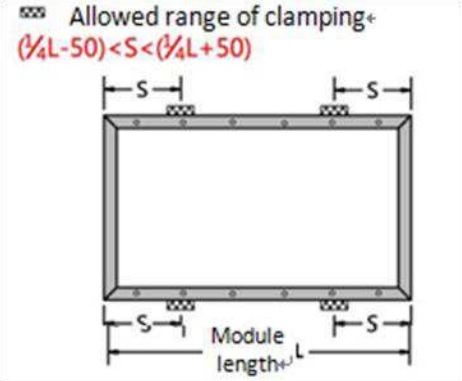
Clamping on short sides	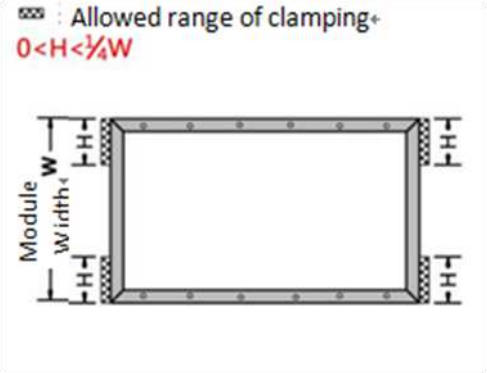	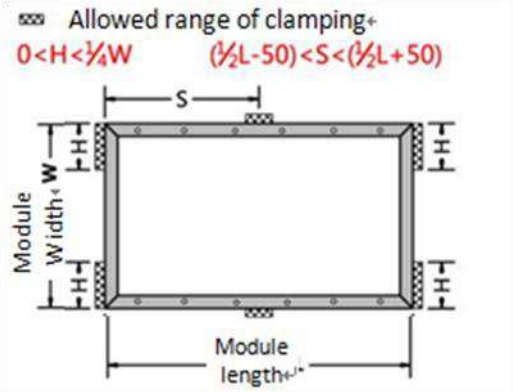
Embedded mounting of frame	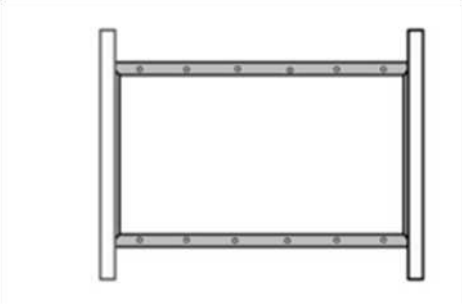	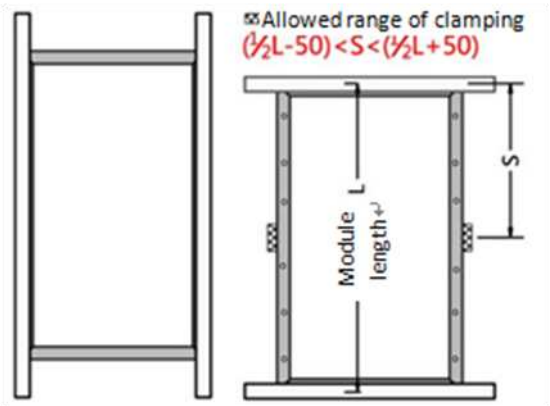

Figure 4 Position of Fixing Points

LONGi Solar Technology Co., Ltd.
TEL:+86-400-9696199
Fax: +86-29-86686228

6 Electric installation

6.1 Electric performance

The electric performance parameters of the module, such as Isc, Voc and Pmax (nominal values) have ±3% tolerance with those under the standard testing conditions: irradiance of 1000 W/m^2, cell temperature of 25℃ and AM (air mass) 1.5;

In normal conditions, the current and voltage values produced by the module are a little bit higher than those under standard testing conditions. Therefore, when you determine the accessories of solar PV power system, such as rated voltage, cable capacity, fuse capacity and the parameters relevant to the module power output, it shall be 1.25 times the current of short circuit (Isc) and voltage of open circuit (Voc) before the use of the accessories.

When the modules are connected in series as a string, the final voltage is the sum of the single module's v Allowed range of clamping es are connected in parallel, the final current is the sum of the single module's current, as shown in Figure 5.

Modules with different electric performance models cannot be connected in one series.

Series Connection

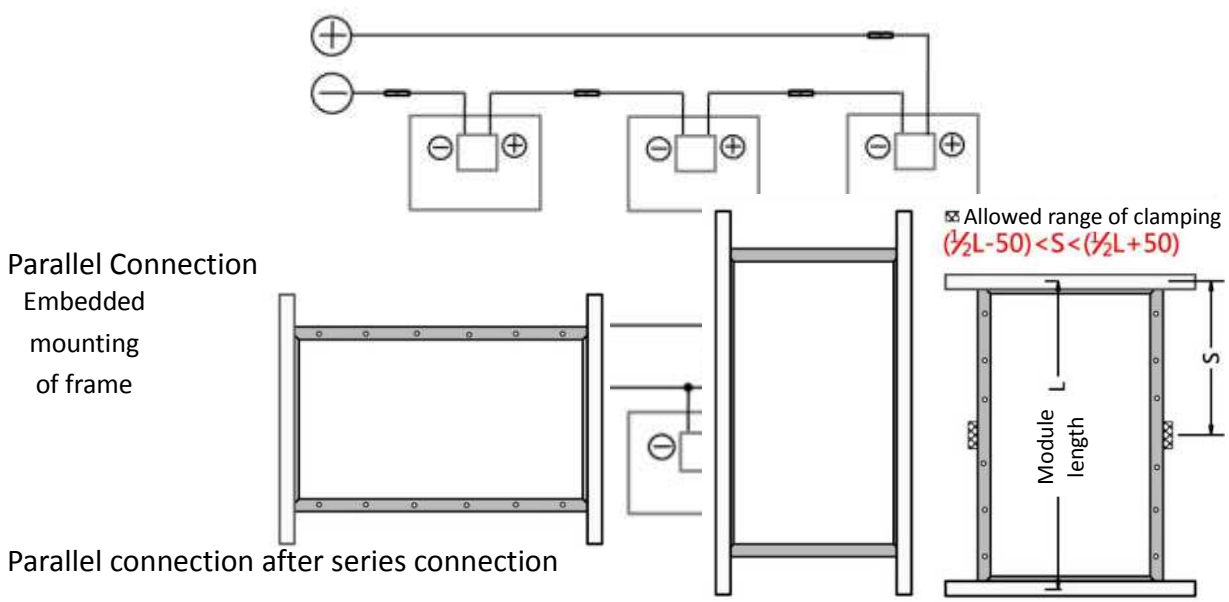

Figure 4 Position of Fixing Points

LONGi Solar Technology Co., Ltd.
TEL:+86-400-9696199
Fax: +86-29-86686228

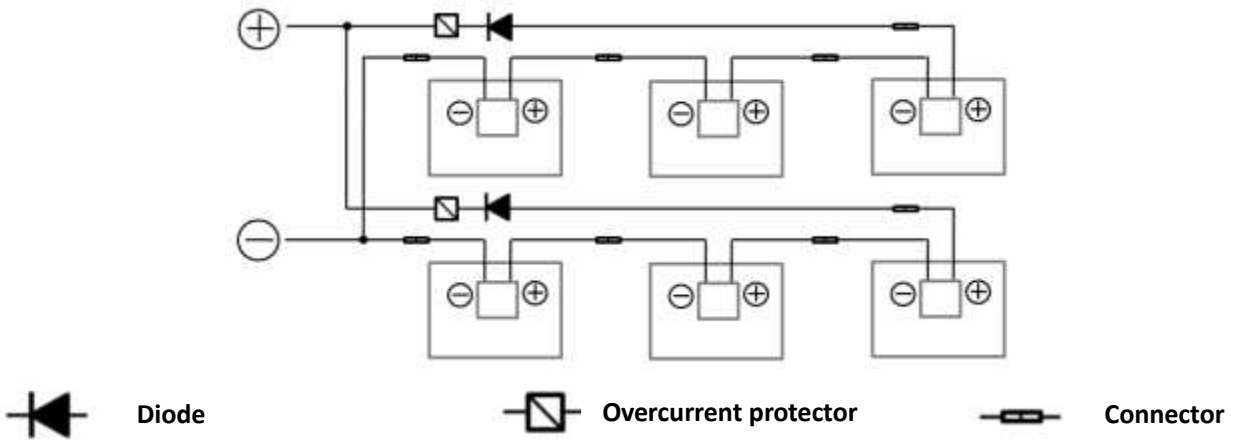

Figure 5: Series Connected and Parallel Connected Circuit Diagrams

The number of modules in series connection in each string shall be calculated as per the relevant regulations. The Voc value at the lowest estimated temperature shall not exceed the maximum system voltage stipulated for modules (LONGi Solar module's maximum system voltage is DC1000V according to IEC61730 safety test) and the values required by other DC electric parts.

The Voc correction factor can be calculated as per the formula below: $C_{Voc}=1-\beta_{Voc}\times(25-T)$. T is the lowest estimated ambient temperature in the installation position. β(%/℃) is the V_{OC} temperature coefficient of the selected module (refer to the technical specification of the module).

If there is reverse current exceeding the maximum fuse current flowing through the module, use overcurrent protection device with the same specification to protect the module; if there are more than 2 parallel connected strings, an overcurrent protection device shall be provided on each string of modules, as shown in Figure 5.

6.2 Cables and Connecting Wires

In module design, the sealed junction boxes with the IP67 protection are applied for on-site connection to provide the ambient protection for cables and connecting wires and contacting protection for non-insulated electric parts. The junction box includes the well connected cables and connectors with the IP67 protection. These designs facilitate series connection of modules. Each module has two cables connecting the junction box, one is negative electrode and the other is positive electrode. Two modules can be series connected by plugging the positive connector of one module into the negative connector of another adjoining module.

LONGi Solar Technology Co., Ltd.
TEL:+86-400-9696199
Fax: +86-29-86686228

The module connecting cables shall withstand the maximum short circuit current of the module. The special sunlight resistant cables for solar PV systems shall be used.

The minimum standards of module connecting cables are as:

Testing Standards	Cable Diameter	Temperature Range
TÜV 2 PfG 11694	$4mm^2$	-40ºC to +90ºC

When cables are fixed on the mounting system, it shall avoid mechanical damage to cables or modules. Do not press cables with force. Use and wire clamps to fix the special designed sunlight resistant cables on the mounting system. Though the cables are sunlight resistant and water proof, it is still necessary to prevent cables from direct sunlight and water immersion.

6.3 Connector

Please keep connectors dry and clean. Make sure that the connector nuts are fastened before connection. Do not plug in connectors when the connectors are damp or dirty or under other status. Protect connectors from direct sunlight and water immersion. Avoid dropping connectors onto the ground or rooftop.

Wrong connections may cause electric arc and electric shock. Please make sure that all electric connection is made firm and steady. Make sure that all connectors with locks are completely locked.

6.4 Bypass Diode

LONGi Solar module's junction box contains bypass diodes in parallel connection with the cell strings. If hot spot occurs partially in the module, the diodes will come into operation to stop the main current from flowing through the hot spot cells, so as to restrain module heating and performance loss. But bypass diodes are not the overcurrent protection device.

If the diode is found or suspected to be faulty, the installer or system maintenance providers shall contact LONGi Solar. Please do not try to open the module junction box on your own.

LONGi Solar Technology Co., Ltd.
TEL:+86-400-9696199
Fax: +86-29-86686228

7 Grounding

In design of modules, the anodized corrosion resistant aluminum frame is used for rigid support. For safety and protecting modules from damage by lightning and static electricity, the module frame shall be grounded.

The grounding device shall be in full contact with inner side of the aluminum frame and penetrate the oxidized coating on the frame surface.

Do not drill additional grounding holes on the module frame.

To get the optimal power output, LONGi Solar suggests that DC negative pole of the solar PV array shall be grounded during the installation. Otherwise, the system's output power may be decreased.

The grounding methods of modules shall not cause electrochemical corrosion between the aluminum frame and other metals. The electric potential difference of contacting metals shall not exceed 0.6V as is recommended in the Appendix of UL1703 *Flat Plate Photovoltaic Modules and Panels.*

The grounding holes on the frame are already drilled in advance and marked with grounding signs. These grounding holes are only used for grounding but not for module installation.

The grounding methods as follows are allowed:

7.1 Grounding by grounding clamp

There is a grounding hole with the diameter of Ø4.2mm at the edge of the module's back frame. The central line of the grounding sign and that of the hole overlaps and is in the same orientation with the frame length.

The grounding between modules shall be confirmed by qualified electricians and grounding devices shall be manufactured by qualified electric manufacturers. The recommended torque is 2.3N•m. The grounding clamp is installed with a 12 AWG copper core wire. And the copper wire cannot be squeezed and damaged when the installation is being carried out.

LONGi Solar Technology Co., Ltd.
TEL:+86-400-9696199
Fax: +86-29-86686228

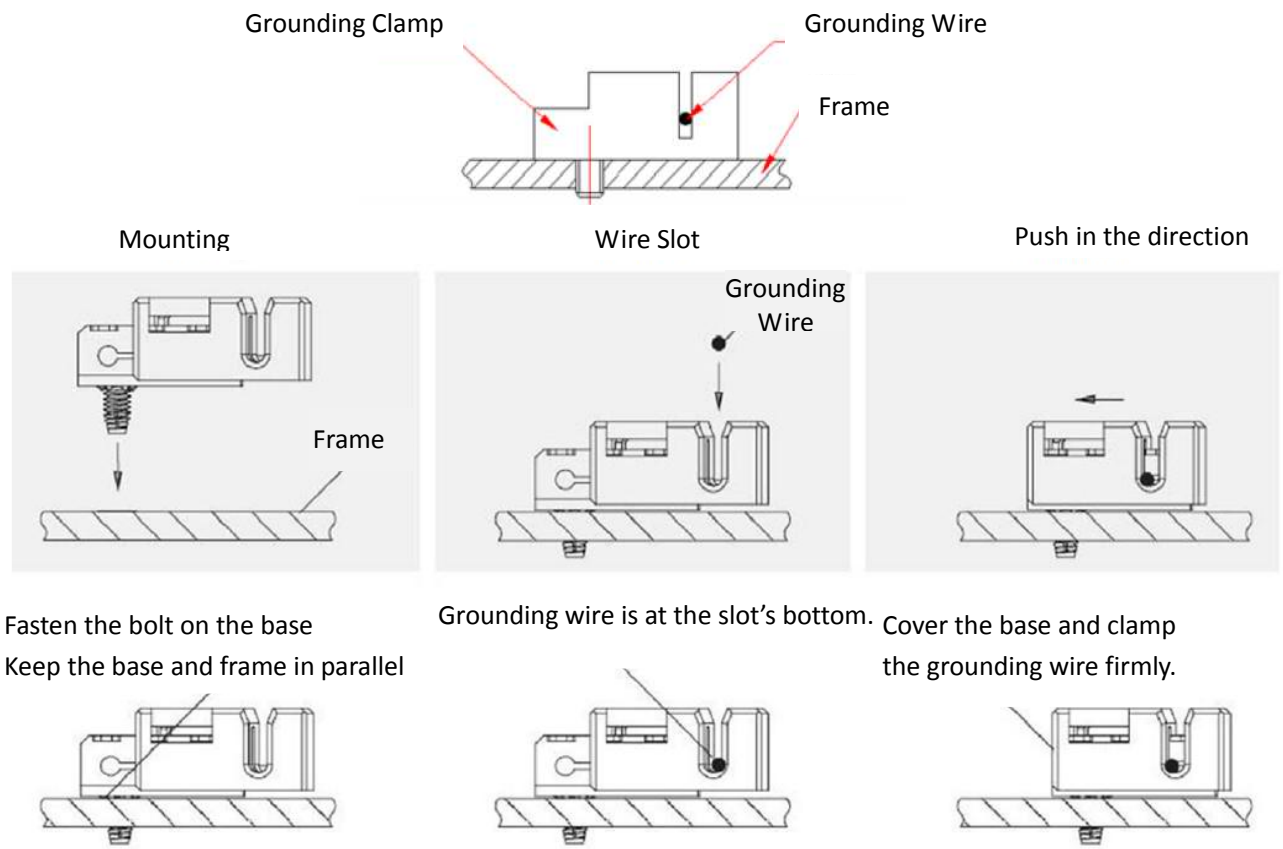

Figure 6 Installation of Grounding Clamp

Note: TYCO. 1954381-1 (recommended) is used in the above figures

7.2 Grounding by Unoccupied Mounting Holes

The mounting holes on the module that are not occupied can be used for installing grounding devices.

1. Align the grounding clamp to the frame mounting hole. Use the grounding bolt to get through the grounding clamp and the frame.
2. Put the tooth side of the tooth washer on the other side and fasten the locking nut. The recommended torque for fastening the nut is 2.0Nm to 2.2Nm.
3. Put grounding wires through the grounding clamp (the grounding wire material and size shall meet requirements of the local national and regional laws and regulations).
4. Fasten the securing bolt of grounding wires. Then installation is over.

LONGi Solar Technology Co., Ltd.
TEL:+86-400-9696199
Fax: +86-29-86686228

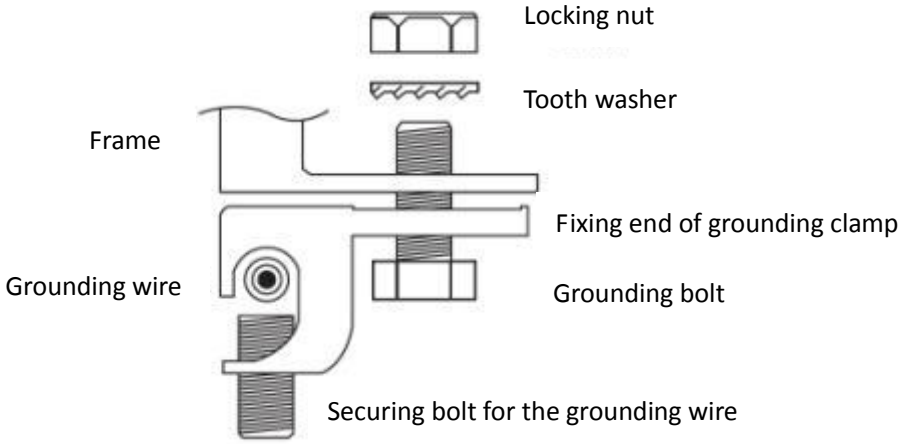

Figure 7 Installation Method

7.3 Other Third Party Grounding Devices

The third party grounding devices can be used for grounding of LONGi Solar modules but such a grounding installation shall be proved to be reliable. The grounding devices shall be operated as per instructions of the manufacturer.

8 Operation and Maintenance

Carry out regular inspection of and maintenance for the modules, which is the user's responsibility and obligation particularly within the quality warranty period. The user shall inform the supplier in written form within two weeks when the modules are found to be faulty or damaged.

8.1 Cleaning

The accumulated dust on the module surface glass will decrease the power output and lead to the hot spot on the partial module, so will the industrial waste water and bird droppings. The degree of influence is determined by transparency of wastes. Small amounts of dust will affect sunlight strength and evenness but is not dangerous and the output power will not be reduced remarkably.

During operation of a module, there shall be no other objects projecting shades on the partial or the entire module, including other modules, mounting system, bird droppings, dust, dirt or plants. These will reduce output power extremely. LONGi Solar suggests that the module surface shall not be sheltered or blocked at any time.

The frequency of cleaning depends on the rate of dust accumulation. Normally, the rainwater will clean the module surface and the cleaning frequency is reduced therefore. It is suggested to

LONGi Solar Technology Co., Ltd.
TEL:+86-400-9696199
Fax: +86-29-86686228

use wet sponge or soft dust cloth containing water to wipe the glass surface. Do not use cleanser containing acid and alkaline to clean modules.

8.2 Inspection of Module Appearance

Check module appearance defects visually, especially:

1. Cracks on the module glass.

2. Corrosion at welding joints of the solar cells' bus bar: it is caused by water vapor ingress into the module due to damage of encapsulating materials during transportation or installation.

3. Check whether there is burning traces on the module's back sheet.

8.3 Inspection of Connectors and Cables

It is suggested to carry out a preventive inspection once every 6 months:

1. Check the seal of connectors and firmness of cable connection.

2. Check whether the sealant of the junction box cracks or have any gap.

LONGi Green Energy Technology Co., Ltd.
Block B, No.8989 Shangji Road, Xi'an Economic and Technological Development Zone, Xi'an, Shaanxi, China.
Tel: +86- 4009696199 Fax: +86-29-86686228
Postal code: 710018 Official website: en.longi-solar.com